NOVECENTO

Design Romani Saccani Architetti Associati

NOVECENTO SP P

History under a new light. The whole Novecento collection was born from the desire to reinterpret the traditional Murano chandelier. To find the perfect synthesis, the designers Romani and Saccani started from the profile: they designed crystal shells produced by the 360° rotation of the historic silhouette. The choice of the crystal or white Rigadin glass finish was the master's touch: its radial stripes evoke the arms of the historic candlestick while maintaining a contemporary flavour. It is available in the following versions: suspension, ceiling lamp, table lamp and floor lamp.

NOVECENTO SP P

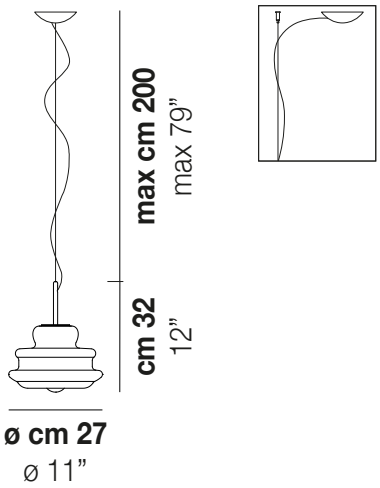

TECHNICAL DATA:

IP20

CERTIFICATIONS:

LIGHT SOURCES

1x60W	220-240 V 50/60 Hz	E14

download

VOLUME	Mc 0,07
GROSS WEIGHT	Kg 5
NET WEIGHT	Kg 2,5

SHADE FINISHING

BCRI

CRRI

FRAME FINISHING

CR

OTHER VERSION AVAILABLE

Click on the version to go to the web version of the product

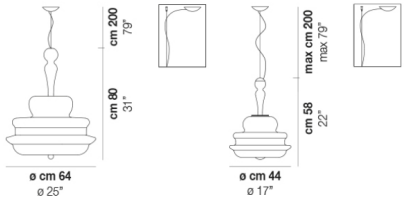

NOVEC SP G NOVEC SP M