PANZERI

Jackie

220-240V AC dimmable (Step DIM)
C07701.000.0409

white

DIRECT LIGHT

Data sheet

CODE	C07701.000.0409
SYSTEM POWER CONSUMPTION	10W
EFFICACY	70.6lm/W
LIGHT SOURCE	LED
LIGHT SOURCE LIFETIME	L90 (B10) 50.000h
COLOUR TEMPERATURE	3000K Ra>90
LIGHT DISTRIBUTION	adjustable
BEAM ANGLE	90°
POWER SUPPLY	220-240V AC
FREQUENCY	50/60Hz
ELECTRICAL CONFIGURATION	dimmable (Step DIM)
DRIVER	integrated included
NOMINAL LUMINOUS FLUX	884lm
LUMEN OUTPUT	706lm
EFFICIENCY	79.9%
WEIGHT	4,10 Kg
PROTECTION DEGREE	IP40
COLOUR TOLLERANCES	SDCM 3
PACKING DIMENSIONS	25,0 x 119,0 x 6,0 cm

Table lighting fixture for interiors, with swivelling light beam.
Pickled sheet metal bearing base in polyacrylic paint.
Extruded aluminium frame in white, black, red, mat brass or titanium polyacrylic paint.
Die-cast aluminium joints in polyacrylic paint.
Steel wire rope slings.
Die-cast aluminium head rotating on two axes in polyacrylic paint.
Modelled acrylic diffuser with mat finish and double serigraphy.
Push-button to adjust luminosity according to 5 levels of visual comfort.
Equipped with a 1,6m (63") long power cable with jack connector and adapter plug.

Technical drawing

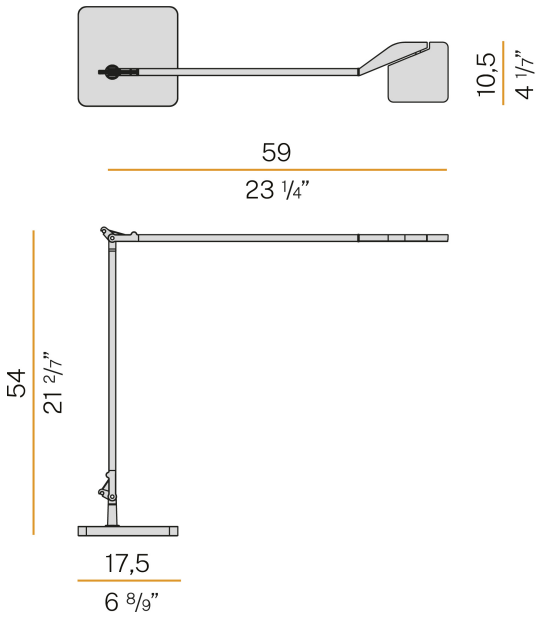
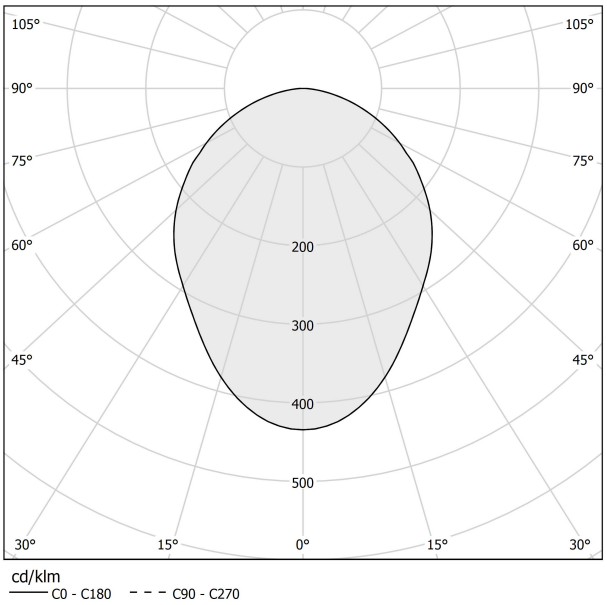
Polar diagram