PANZERI

Jackie Iot

220-240V AC dimmable (IoT/Step DIM)
CP07730.000.0413

titanium

DIRECT LIGHT

Data sheet

CODE	CP07730.000.0413
SYSTEM POWER CONSUMPTION	10W
EFFICACY	70.6lm/W
LIGHT SOURCE	LED
LIGHT SOURCE LIFETIME	L90 (B10) 50.000h
COLOUR TEMPERATURE	3000K Ra>90
LIGHT DISTRIBUTION	adjustable
BEAM ANGLE	90°
POWER SUPPLY	220-240V AC
FREQUENCY	50/60Hz
ELECTRICAL CONFIGURATION	dimmable (IoT/Step DIM)
DRIVER	integrated included
NOMINAL LUMINOUS FLUX	884lm
LUMEN OUTPUT	706lm
EFFICIENCY	79.9%
WEIGHT	0,63 Kg
PROTECTION DEGREE	IP40
COLOUR TOLLERANCES	SDCM 3
PACKING DIMENSIONS	6,0 x 119,0 x 25,0 cm

Table lighting fixture for interiors, with swivelling light beam.
Galvanized steel fixing pin.
Extruded aluminium frame in white, black, red or titanium polyacrylic paint.
Die-cast aluminium joints in polyacrylic paint.
Steel wire rope slings.
Die-cast aluminium head rotating on two axes in polyacrylic paint.
Modelled acrylic diffuser with mat finish and double serigraphy.
Push-button to adjust luminosity according to 5 levels of visual comfort.
Module for luminous flux automatic regulation, complete with sensor for measuring environmental conditions and with Bluetooth antenna for managing the device or for connecting it to a Building Automation system.
Equipped with a 1,6m (63") long power cable with jack connector and adapter plug.

Technical drawing

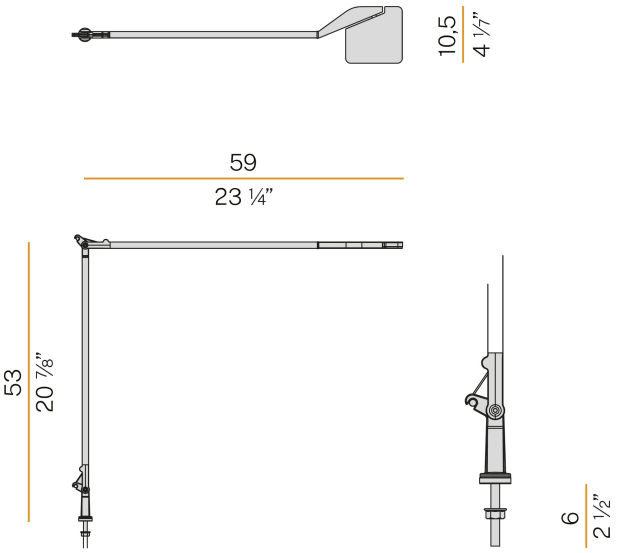
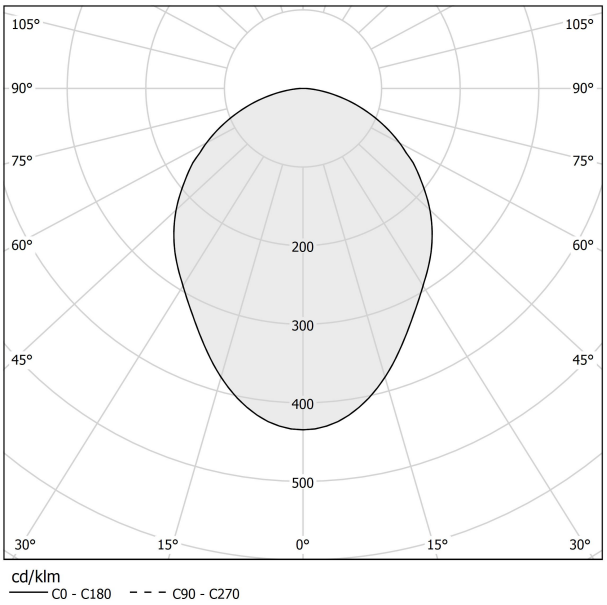
Polar diagram