PANZERI

Scent Pixel

220-240V AC
KRT02706.V04.002

DIRECT LIGHT

Data sheet

CODE	KRT02706.V04.002
SYSTEM POWER CONSUMPTION	47W
EFFICACY	0.34lm/W
LIGHT SOURCE	LED
LIGHT DISTRIBUTION	flood
POWER SUPPLY	220-240V AC
FREQUENCY	50/60Hz
DRIVER	integrated included
NOMINAL LUMINOUS FLUX	16x270lm
LUMEN OUTPUT	16x181lm
EFFICIENCY	100%
WEIGHT	6,05 Kg
PROTECTION DEGREE	IP20
COLOUR TOLLERANCES	SDCM 3
PACKING DIMENSIONS	0,0 x 0,0 x 0,0 cm



Scent Pixel evolves the concept of punctual lighting into a system of pure creative freedom, transforming light from a single accent into a true architectural structure.
The Pixel module strips away the superfluous to become rhythm and geometry: a discreet element that allows for the composition of luminous constellations capable of vibrating in space.
Its precious soul, inspired by perfume bottles, reveals itself through the glass facets, which multiply into a creative narrative.
It is an invitation to design not just the light, but the atmosphere itself, letting every installation become a diffuse and profound sensory story.
Cluster version with radial 16-element ceiling canopy.
Accessories for electrical cables offset included.

Technical drawing

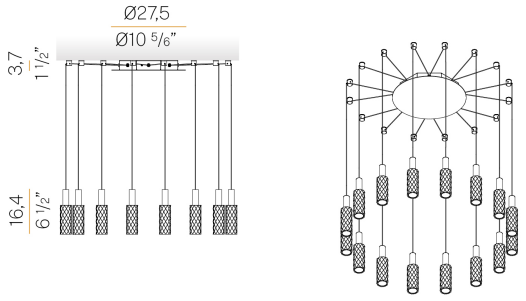

Polar diagram