PANZERI

Bella

220-240V AC ON-OFF
L05201.011.0501

white

DIRECT LIGHT

Data sheet

CODE	L05201.011.0501
SYSTEM POWER CONSUMPTION	6,5W
EFFICACY	64.67lm/W
LIGHT SOURCE	LED
LIGHT SOURCE LIFETIME	L80 (B10) 70.000h
COLOUR TEMPERATURE	2700K Ra>90
LIGHT DISTRIBUTION	diffused
POWER SUPPLY	220-240V AC
FREQUENCY	50/60Hz
ELECTRICAL CONFIGURATION	ON-OFF
DRIVER	integrated included
NOMINAL LUMINOUS FLUX	460lm
LUMEN OUTPUT	388lm
EFFICIENCY	84.3%
WEIGHT	0,55 Kg
PROTECTION DEGREE	IP40
COLOUR TOLLERANCES	SDCM 3
PACKING DIMENSIONS	13,0 x 24,0 x 12,0 cm

Suspension lighting fixture for interiors, with direct light emission.
Die-cast aluminium structure in white, black, bronze, mat brass or titanium polyacrylic paint.
Modelled acrylic diffuser with mat finish.
Aluminium closing disk in polyacrylic paint.
Suspension kit with rod in brass tube in polyacrylic paint.
3m (118,1") long suspension and coaxial power cable in transparent PVC.
Power canopy with pickled sheet metal ceiling bracket and extruded aluminium covering in white, black, bronze, mat brass or titanium polyacrylic paint.

Technical drawing

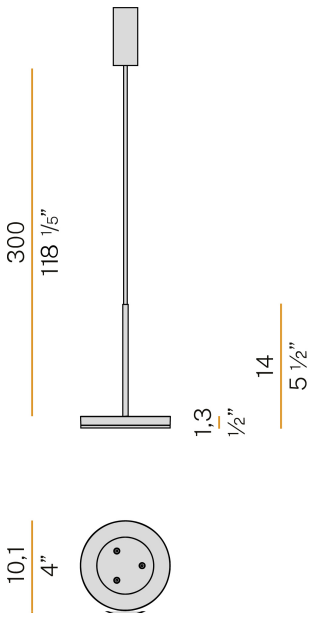

Polar diagram

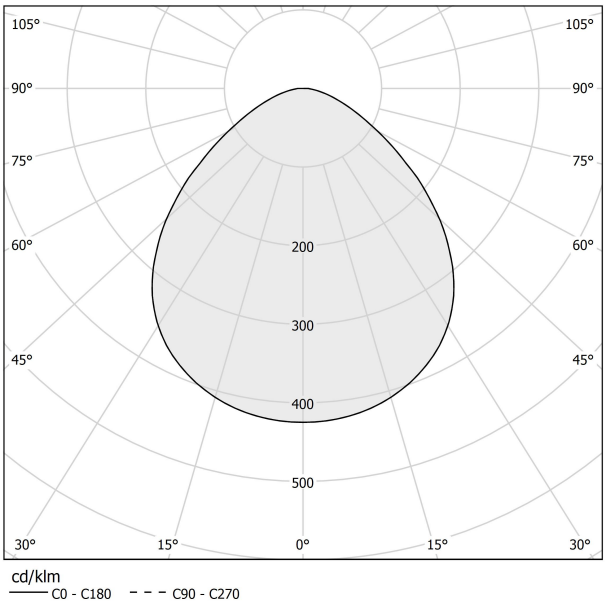

PANZERI

Bella

Accessories / diffusion

YPL05207.015
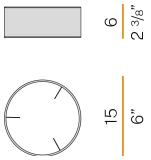
Ivory pleated fabric lampshade, simple snap installation.