FLOS

F1074009 White

Bellhop Glass T

Designed by Edward Barber and Jay Osgerby, 2024

Halogen - 100W

Table lamp emitting diffused light. Features a cylindrical aluminium base with a triplex opaline glass diffuser formed from three simultaneously blown layers of variable thickness. Equipped with an integrated dimmer.

One of Edward Barber and Jay Osgerby's most iconic designs for Flos, Bellhop has evolved from a playful portable lamp into a full family of light. Bellhop Glass reimagines the archetype in triplex opaline glass and metal, materials that give the lamp greater scale, substance and atmosphere. The mouth-blown diffuser allows the entire surface to glow with even warmth. Table, ceiling and suspension versions transform the youthful spirit of the original into a more architectural presence, while evoking the intimacy of candlelight that first inspired the design.

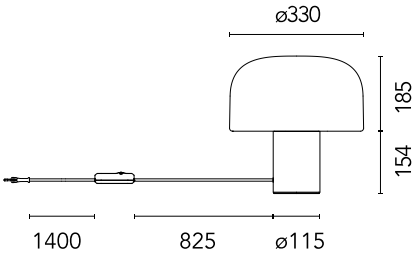

Are you a professional and your project needs consulting and support?

BOOK AN APPOINTMENT

Download

Mounting instructions	PDF
Mounting instructions	PDF

Photometric Files

LDT / IES	ZIP

Main specifications

EAN	8059607069288
Mounting	Table
Environments	Indoor dry location
Light source type	Bulb
Light sources included	No
Lamp category	Halogen
Lamp holders	E27
Number of lamps	1
Power (W)	100

Physical

Colour	White
Length (mm)	330
Cord colour	Grey
Cord length (mm)	2400
Net weight (kg)	3.5
Package volume (m3)	0.06
IP internal	20

©2026 Flos - P.IVA 00290820174 - 9/3/2026

In our constantly evolving world and business, technical upgrades happen every day. This means all product specifications and data are subject to change without warning in order t improve reliability, function, performance or otherwise. We make every effort to ensure the accuracy of our product images, however due to different lighting and screens used for viewing, the colours may vary. Images are indicative of the quality and style of the product but may not represent the precise details of the product you receive. This is because we are constantly working to make improvements. For aesthetic reasons, cables and/or electrical elements are often not shown. Refer to technical data sheets for all technical data. Images and colours are not part of any contract or warranty in any way.

Schematic light drawing

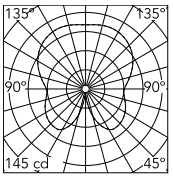

Luminous flux luminaire
2000 lm

Beam Angle: -

h(m)	E(lx)	D(m)
1	0	
2	0	
3	0	
4	0	
5	0	

Photometric

Lighting type	Direct, Indirect
Light distribution	Symmetric
Extreme cut off	No

Electrical

Insulation class	II
Frequency (Hz)	50/60
Main voltage (Vac)	220-240
Dimmable	Yes
Dimming interface	Dimmer Integrated
Plug type	Type C
Batteries inside	No

©2026 Flos - P.IVA 00290820174 - 9/3/2026

In our constantly evolving world and business, technical upgrades happen every day. This means all product specifications and data are subject to change without warning in order t improve reliability, function, performance or otherwise. We make every effort to ensure the accuracy of our product images, however due to different lighting and screens used for viewing, the colours may vary. Images are indicative of the quality and style of the product but may not represent the precise details of the product you receive. This is because we are constantly working to make improvements. For aesthetic reasons, cables and/or electrical elements are often not shown. Refer to technical data sheets for all technical data. Images and colours are not part of any contract or warranty in any way.

Bulbs

NOT INCLUDED

RF32288

LED Lamp E27 15W 2700K T38

NOT INCLUDED

RF32289

LED Lamp E27 15W 3000K T38

©2026 Flos - P.IVA 00290820174 - 9/3/2026

In our constantly evolving world and business, technical upgrades happen every day. This means all product specifications and data are subject to change without warning in order t improve reliability, function, performance or otherwise. We make every effort to ensure the accuracy of our product images, however due to different lighting and screens used for viewing, the colours may vary. Images are indicative of the quality and style of the product but may not represent the precise details of the product you receive. This is because we are constantly working to make improvements. For aesthetic reasons, cables and/or electrical elements are often not shown. Refer to technical data sheets for all technical data. Images and colours are not part of any contract or warranty in any way.

Spare Parts

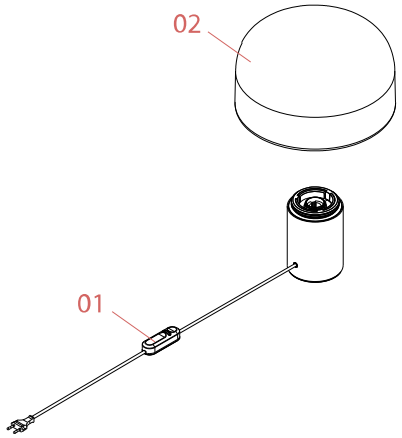

01.	Black Dimmer Switch	RF28206
02.	Bellhop Glass Table white diffuser	F1076009

©2026 Flos - P.IVA 00290820174 - 9/3/2026

In our constantly evolving world and business, technical upgrades happen every day. This means all product specifications and data are subject to change without warning in order t improve reliability, function, performance or otherwise. We make every effort to ensure the accuracy of our product images, however due to different lighting and screens used for viewing, the colours may vary. Images are indicative of the quality and style of the product but may not represent the precise details of the product you receive. This is because we are constantly working to make improvements. For aesthetic reasons, cables and/or electrical elements are often not shown. Refer to technical data sheets for all technical data. Images and colours are not part of any contract or warranty in any way.

RF28206

Black Dimmer Switch

F1076009

Bellhop Glass Table white diffuser

©2026 Flos - P.IVA 00290820174 - 9/3/2026

In our constantly evolving world and business, technical upgrades happen every day. This means all product specifications and data are subject to change without warning in order t improve reliability, function, performance or otherwise. We make every effort to ensure the accuracy of our product images, however due to different lighting and screens used for viewing, the colours may vary. Images are indicative of the quality and style of the product but may not represent the precise details of the product you receive. This is because we are constantly working to make improvements. For aesthetic reasons, cables and/or electrical elements are often not shown. Refer to technical data sheets for all technical data. Images and colours are not part of any contract or warranty in any way.