FLOS

D305W02CEEAB1 Black

Nocturne W Cone

Designed by Konstantin Grcic, 2026

12W - 545lm - 2700K - CRI> 90

Modular wall lamp emitting direct and ambient light. Extruded aluminium base and arm with rectangular wall fixing plate. Extra-clear borosilicate glass diffuser in conical form providing focused directional illumination. Die-cast aluminium Light Engine housed within lamp junctions. Dual LED sources: COB LED and perimetral halo LED. Conical light unit swivels on two axes. Dimmable phase cut.

Designed by Konstantin Grcic, Nocturne combines the precise logic of industrial aluminium with the timeless beauty of blown glass. In the floor version, the system rises vertically, allowing one or more luminous volumes to structure the space. Conceived as a modular composition, Nocturne opens tailored possibilities for both architectural and domestic environments. Its innovative Light Engine activates the glass from within, pairing high-performance illumination with a soft halo that gives the transparent material a luminous, almost ethereal quality.

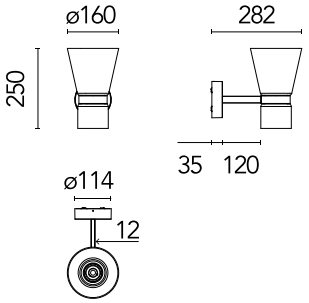

Are you a professional and your project needs consulting and support?

BOOK AN APPOINTMENT

Main specifications

EAN	8059607078471
Mounting	Wall
Environments	Indoor dry location
Light source type	LED
Light sources included	Yes
LED type	LED array, LED Module
Power (W)	12
System power (W)	12
Lumen Output (lm)	545

Physical

Colour	Black
Length (mm)	282
Canopy length/diameter (mm)	114
Canopy height (mm)	35
Net weight (kg)	1.3
Package volume (m3)	0.05
IP internal	20

Download

Mounting instructions PDF

Photometric Files

LDT / IES ZIP

Technical Drawings

2D ZIP

3D ZIP

Ecodesign and Energy Labelling

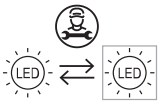

Replaceable (LED only) light source by a professional

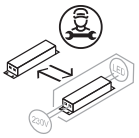

Replaceable control gear by a professional

©2026 Flos - P.IVA 00290820174 - 9/3/2026

In our constantly evolving world and business, technical upgrades happen every day. This means all product specifications and data are subject to change without warning in order t improve reliability, function, performance or otherwise. We make every effort to ensure the accuracy of our product images, however due to different lighting and screens used for viewing, the colours may vary. Images are indicative of the quality and style of the product but may not represent the precise details of the product you receive. This is because we are constantly working to make improvements. For aesthetic reasons, cables and/or electrical elements are often not shown. Refer to technical data sheets for all technical data. Images and colours are not part of any contract or warranty in any way.

Schematic light drawing

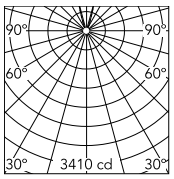

Luminous flux luminaire
545 lm

Beam Angle: 22°

h(m)	E(lx)	D(m)
1	3410	0.40
2	852	0.79
3	379	1.19
4	213	1.59
5	136	1.99

Photometric

Lighting type	Direct, Indirect
CCT (K)	2700
CRI>	90

Electrical

Insulation class	I
Frequency (Hz)	50/60
Main voltage (Vac)	220-240
Power supply	Integrated
Dimmable	Yes
Power supply type	Mains Cut Dimming
Dimming interface	Remote Dimmable (Dimmer Not Included)
Batteries inside	No

©2026 Flos - P.IVA 00290820174 - 9/3/2026

In our constantly evolving world and business, technical upgrades happen every day. This means all product specifications and data are subject to change without warning in order t improve reliability, function, performance or otherwise. We make every effort to ensure the accuracy of our product images, however due to different lighting and screens used for viewing, the colours may vary. Images are indicative of the quality and style of the product but may not represent the precise details of the product you receive. This is because we are constantly working to make improvements. For aesthetic reasons, cables and/or electrical elements are often not shown. Refer to technical data sheets for all technical data. Images and colours are not part of any contract or warranty in any way.

Spare Parts

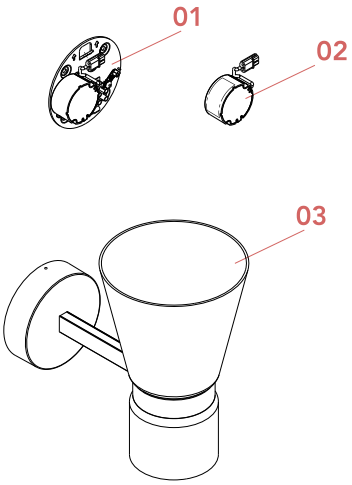

01.	Nocturne W Ceiling Rose EU	D305W03AEEAZZ
02.	Nocturne W Power Supply EU	RF38302
03.	Nocturne W Black cone diffuser	D305W05C0EAB1

©2026 Flos - P.IVA 00290820174 - 9/3/2026

In our constantly evolving world and business, technical upgrades happen every day. This means all product specifications and data are subject to change without warning in order t improve reliability, function, performance or otherwise. We make every effort to ensure the accuracy of our product images, however due to different lighting and screens used for viewing, the colours may vary. Images are indicative of the quality and style of the product but may not represent the precise details of the product you receive. This is because we are constantly working to make improvements. For aesthetic reasons, cables and/or electrical elements are often not shown. Refer to technical data sheets for all technical data. Images and colours are not part of any contract or warranty in any way.

D305W03AEEAZZ

Nocturne W Ceiling Rose EU

RF38302

Nocturne W Power Supply EU

D305W05C0EAB1

Nocturne W Black cone diffuser

©2026 Flos - P.IVA 00290820174 - 9/3/2026

In our constantly evolving world and business, technical upgrades happen every day. This means all product specifications and data are subject to change without warning in order t improve reliability, function, performance or otherwise. We make every effort to ensure the accuracy of our product images, however due to different lighting and screens used for viewing, the colours may vary. Images are indicative of the quality and style of the product but may not represent the precise details of the product you receive. This is because we are constantly working to make improvements. For aesthetic reasons, cables and/or electrical elements are often not shown. Refer to technical data sheets for all technical data. Images and colours are not part of any contract or warranty in any way.