CLESSIDRA INDOOR

Designed by Antonio Citterio, 2011

F1584057

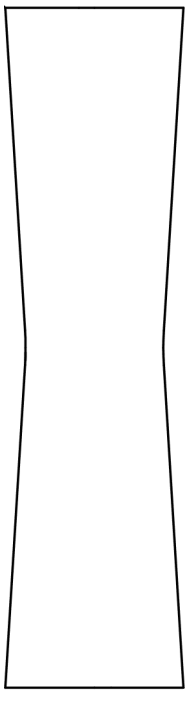

©2021 Flos - All rights reserved - www.flos.com
Flos reserves the right to introduce any changes to its own models, without prior notice.

CLESSIDRA INDOOR

F1584057

EN

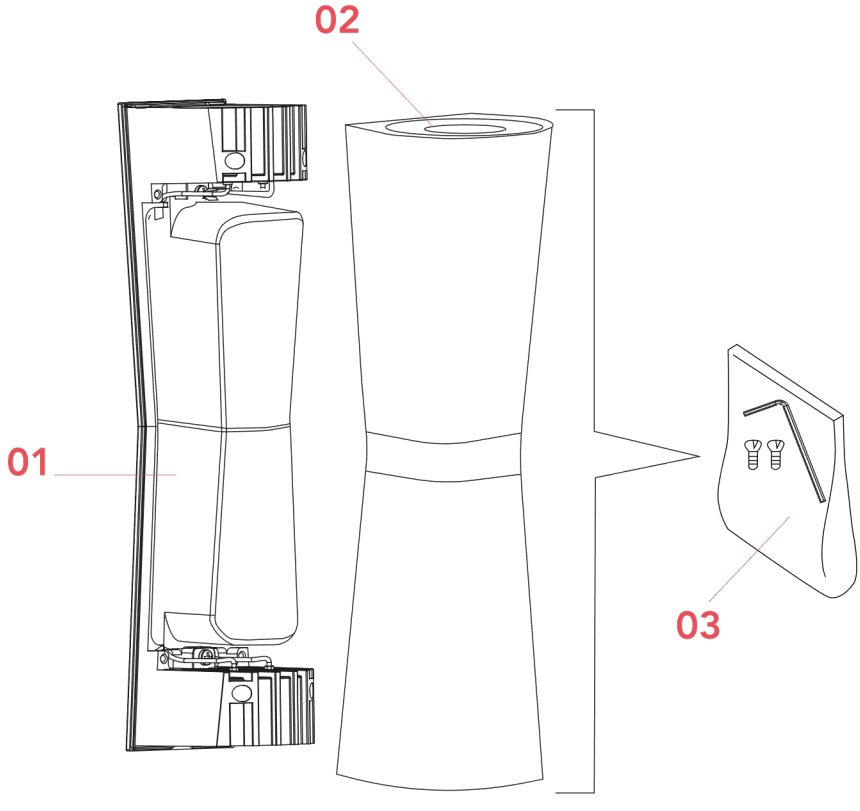

01.F1582030 – Wall attachment and internal lamp body 20°+20°

02. F1580057 – Chrome external Clessidra lamp body

03. RF1580100 – Screw and tool kit for Clessidra external lamp body

©2021 Flos - All rights reserved - www.flos.com
Flos reserves the right to introduce any changes to its own models, without prior notice.

CLESSIDRA INDOOR F1584057 **EN**

F1582030

WALL ATTACHMENT AND INTERNAL LAMP BODY 40°+40°

WARNING! When installing and whenever acting on the appliance, ensure that the power supply has been switched off.
For the installation of the spare-part, it is necessary to consult a qualified electrician.

©2021 Flos - All rights reserved - www.flos.com
Flos reserves the right to introduce any changes to its own models, without prior notice.

CLESSIDRA INDOOR F1584057 **EN**

F1582030

WALL ATTACHMENT AND INTERNAL LAMP BODY 40°+40°

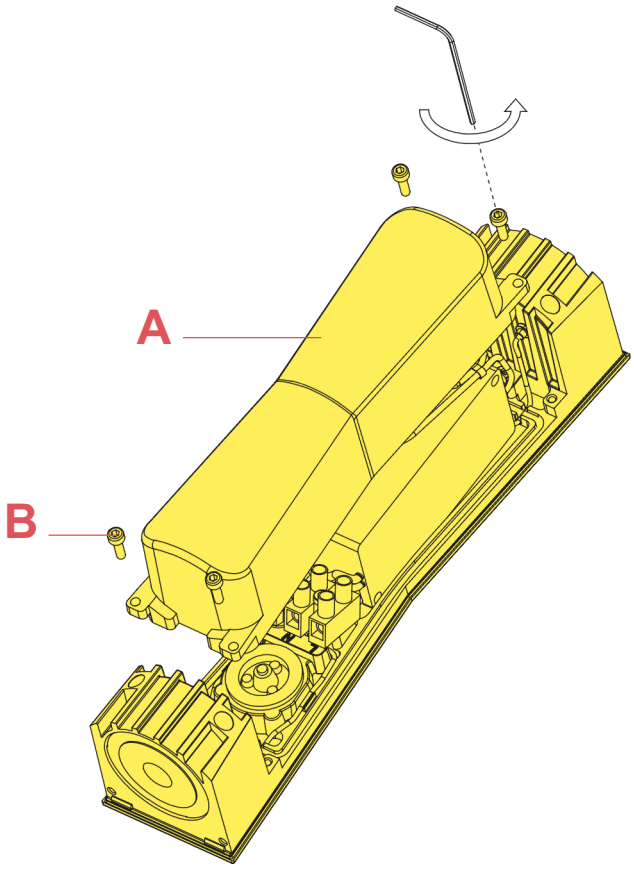

Fig.1

Dismantle the cover (A) unscrewing the screws (B) with the allen key included.

WARNING! When installing and whenever acting on the appliance, ensure that the power supply has been switched off.
For the installation of the spare-part, it is necessary to consult a qualified electrician.

©2021 Flos - All rights reserved - www.flos.com
Flos reserves the right to introduce any changes to its own models, without prior notice.

CLESSIDRA INDOOR F1584057 **EN**

F1582030

WALL ATTACHMENT AND INTERNAL LAMP BODY 40°+40°

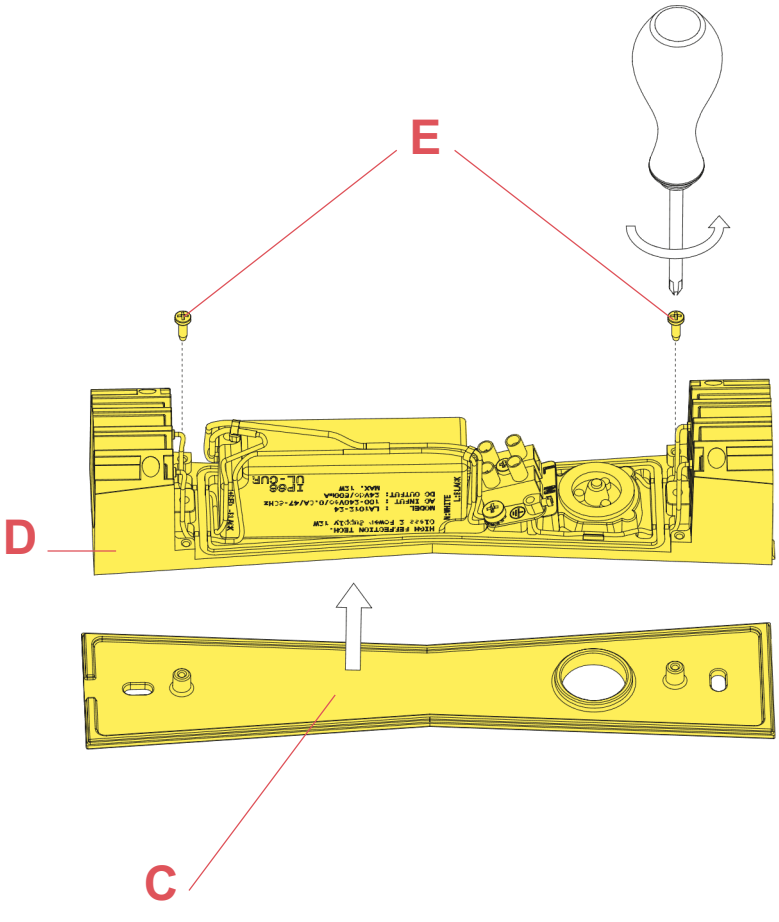

Fig.2

Separate the wall attachment from the (C) body (D) unscrewing the screws (E).

WARNING! When installing and whenever acting on the appliance, ensure that the power supply has been switched off.
For the installation of the spare-part, it is necessary to consult a qualified electrician.

©2021 Flos - All rights reserved - www.flos.com
Flos reserves the right to introduce any changes to its own models, without prior notice.

F1582030

WALL ATTACHMENT AND INTERNAL LAMP BODY 40°+40°

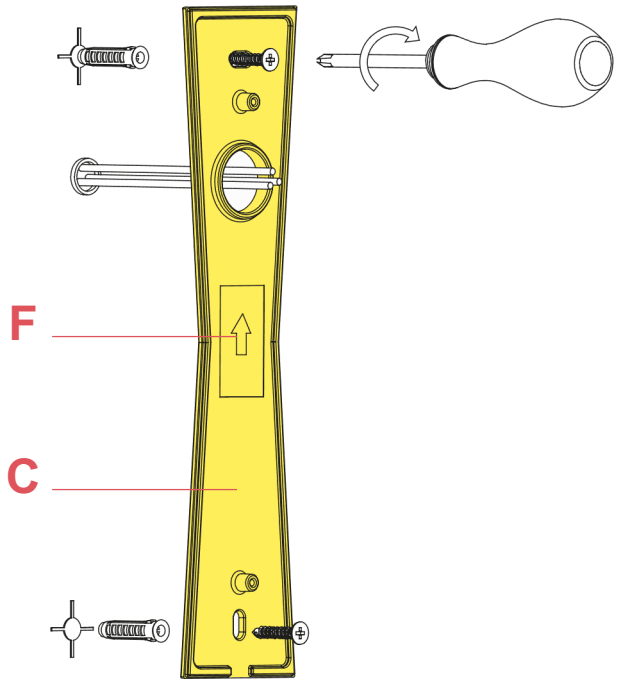

Fig.3

Fix the wall attachment (C) with screws and rawl plugs taking care to put it the correct way up as indicated by the arrow (F) and passing the power cables through the correct hole.
NOTE: Choose screw anchors that are suitable for the surface which shall be assembled upon.

WARNING! When installing and whenever acting on the appliance, ensure that the power supply has been switched off.
For the installation of the spare-part, it is necessary to consult a qualified electrician.

©2021 Flos - All rights reserved - www.flos.com
Flos reserves the right to introduce any changes to its own models, without prior notice.

F1582030

WALL ATTACHMENT AND INTERNAL LAMP BODY 40°+40°

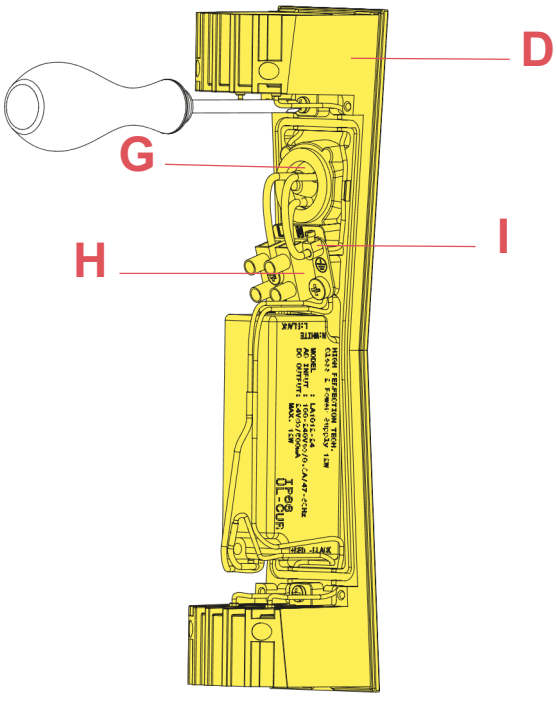

Fig.4

Remount the body (D) onto the wall attachment taking care to pass the supply cables through the fairlead (G), then make the electrical connections in the terminal box(H) and to the earth terminal (I).

WARNING! When installing and whenever acting on the appliance, ensure that the power supply has been switched off.
For the installation of the spare-part, it is necessary to consult a qualified electrician.

©2021 Flos - All rights reserved - www.flos.com
Flos reserves the right to introduce any changes to its own models, without prior notice.

F1582030

WALL ATTACHMENT AND INTERNAL LAMP BODY 40°+40°

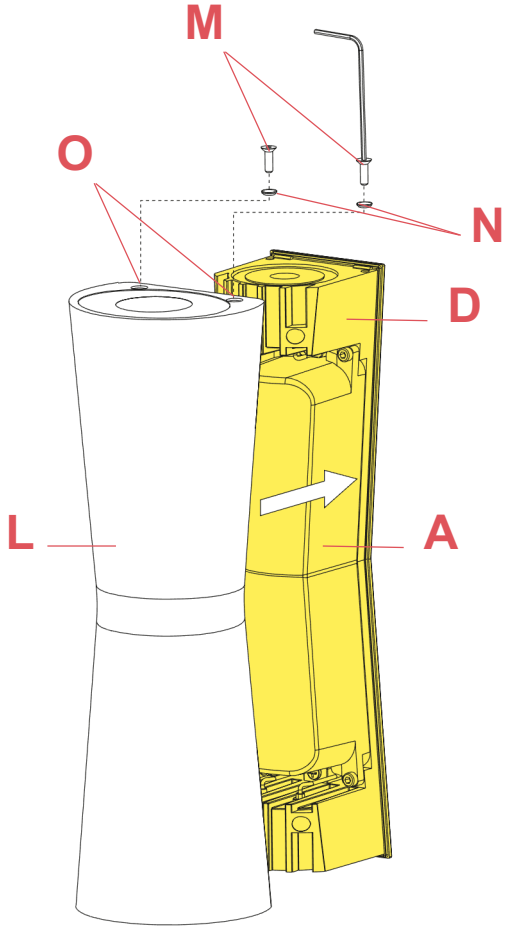

Fig.5

Remount the cover (A); mount the external body (L) onto the internal body (D) with the screws (M) included taking care to put the washers (N) in the correct positions. (O).

WARNING! When installing and whenever acting on the appliance, ensure that the power supply has been switched off.
For the installation of the spare-part, it is necessary to consult a qualified electrician.

©2021 Flos - All rights reserved - www.flos.com
Flos reserves the right to introduce any changes to its own models, without prior notice.

CLESSIDRA INDOOR F1584057 **EN**

F1580057

CHROME EXTERNAL CLESSIDRA LAMP BODY

WARNING! When installing and whenever acting on the appliance, ensure that the power supply has been switched off.
For the installation of the spare-part, it is necessary to consult a qualified electrician.

©2021 Flos - All rights reserved - www.flos.com
Flos reserves the right to introduce any changes to its own models, without prior notice.

F1580057

CHROME EXTERNAL CLESSIDRA LAMP BODY

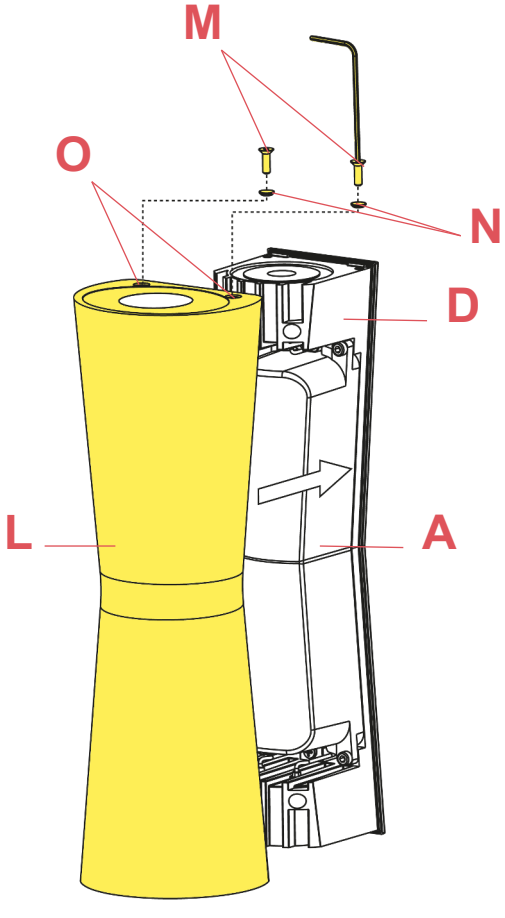

Fig.1

Assemble the external body (L) onto the internal body (D) with the screws (M) included ensuring to position the washers (N) in the correct positions (O).

WARNING! When installing and whenever acting on the appliance, ensure that the power supply has been switched off.
For the installation of the spare-part, it is necessary to consult a qualified electrician.

©2021 Flos - All rights reserved - www.flos.com
Flos reserves the right to introduce any changes to its own models, without prior notice.

CLESSIDRA INDOOR F1584057 **EN**

RF1580100

SCREWS AND TOOL KIT FOR CLESSIDRA EXTERNAL LAMP BODY

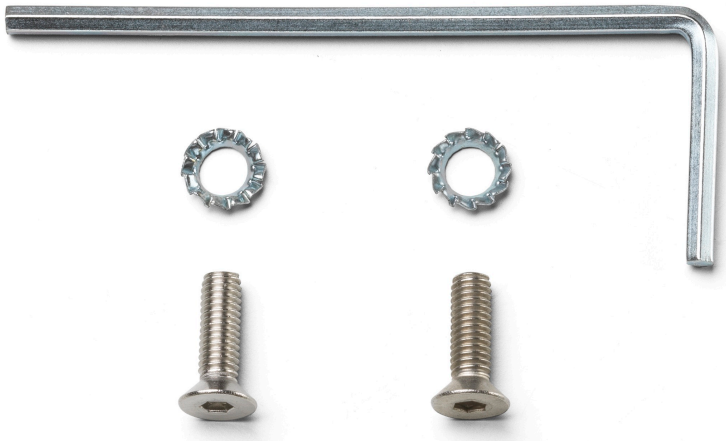

WARNING! When installing and whenever acting on the appliance, ensure that the power supply has been switched off.
For the installation of the spare-part, it is necessary to consult a qualified electrician.

©2021 Flos - All rights reserved - www.flos.com
Flos reserves the right to introduce any changes to its own models, without prior notice.

CLESSIDRA INDOOR F1584057 **EN**

RF1580100

SCREWS AND TOOL KIT FOR CLESSIDRA EXTERNAL LAMP BODY

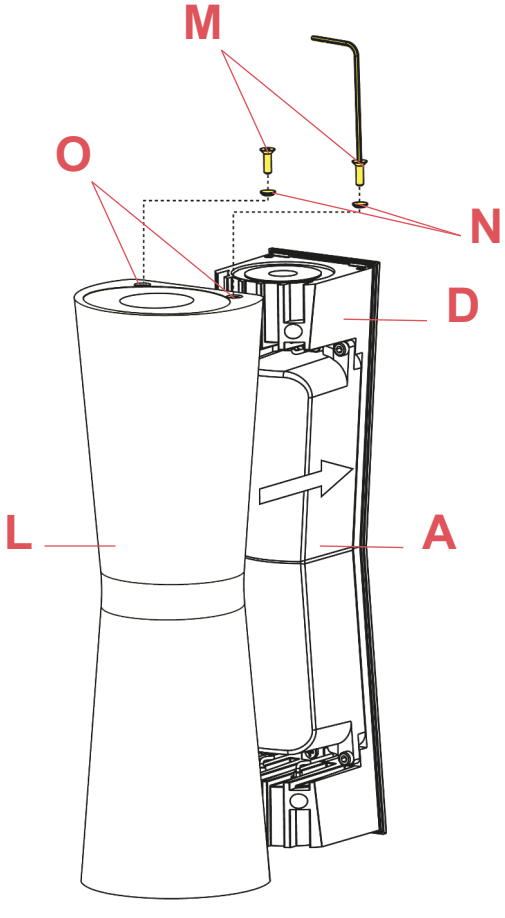

Fig.1

Assemble the external body (L) onto the internal body (D) with the screws (M) included ensuring to position the washers (N) in the correct positions (O).

WARNING! When installing and whenever acting on the appliance, ensure that the power supply has been switched off.
For the installation of the spare-part, it is necessary to consult a qualified electrician.

©2021 Flos - All rights reserved - www.flos.com
Flos reserves the right to introduce any changes to its own models, without prior notice.